Conductive level switch RIZUR-300 compact version

Intended use and application area

Conductive level switches RIZUR-300 in a compact design variant are an optimal solution for precise control of one or several levels of conductive media in open and closed tanks, as well as in the processing vessels. Level switches with this operating principle work efficiently with any liquids with electric conductivity of 0,2 µS and more, e.g. drinking, sea or process water, salt, alkali or acid solutions, food-grade liquids (milk, beer, juices), sewage and drainage water, etc.

The device is used in oil&gas, food, chemical, metallurgical, pulp-and-paper, pharmaceutical and other branches of the industry, where it's required to control, regulate and coordinate technological processes. Depending on the design variant, one level switch can control up to 4 points. On request, it's possible to manufacture RIZUR-300 for level interface control, e.g. water-hydrocarbons.

Design and operating principle

The operating principle of the level switches RIZUR-300 is based on the transforming of the electric resistance between the switch's probe and the tank's wall into a relay signal. Upon the immersion of the switch's probe into the controlled media, the resistance in the area between the probe and the wall decreases, light-emitting diode lights up and a relay of the corresponding channel is activated. In case there's no media, the resistance increases, the light-emitting diode goes out, and the relay is deactivated.

The compact version of the conductive level switch RIZUR-300 has the primary (the probe) and the secondary (electronic unit) transmitters combined. The probe for RIZUR-300 can be a rod or a wire rope one, depending on the process and order conditions. The housing and the cover of the secondary transmitter are made from cast aluminum. The housing of the electronic unit can be made from stainless steel on request. The housing has a grounding stud, screw for the cover fixation, a marking plate, two holes for the cable glands. The cover has a translucent part for monitoring the switch's indication. The housing has an electronic unit with terminals for cable connection. It's possible to connect the supply and signaling circuits through one or two cable glands. The electronic unit of the level switch has an LED indicator that displays the state of the controlled media and the operational condition of the device itself. Depending on the design variants, the secondary transmitter can have a relay or a 4-20mA discreet output signal.

The tank with controlled media should be grounded and connected to the «GND» terminal of the secondary transmitter.

Upon installation of RIZUR-300 on the tanks made from non-conductive materials (e.g. plastic), it's necessary to ensure that there's an additional electrode (for example, a metal plate or a strip) that is grounded and connected to the “GND” terminal of the secondary transmitter.

The level switch should be mounted in such a way that eliminates the possibility of its short-circuit with the wall of the metal tank. It's recommended not to use conductive level switches for level control of the liquids that generate non-conductive depositions (film) on the probe. Other limitations include excessive foaming and steaming of the controlled media.

This type of level switches is not designed for working with viscous, adhesive or dielectric liquids.

Dimensional specifications of the secondary transmitter

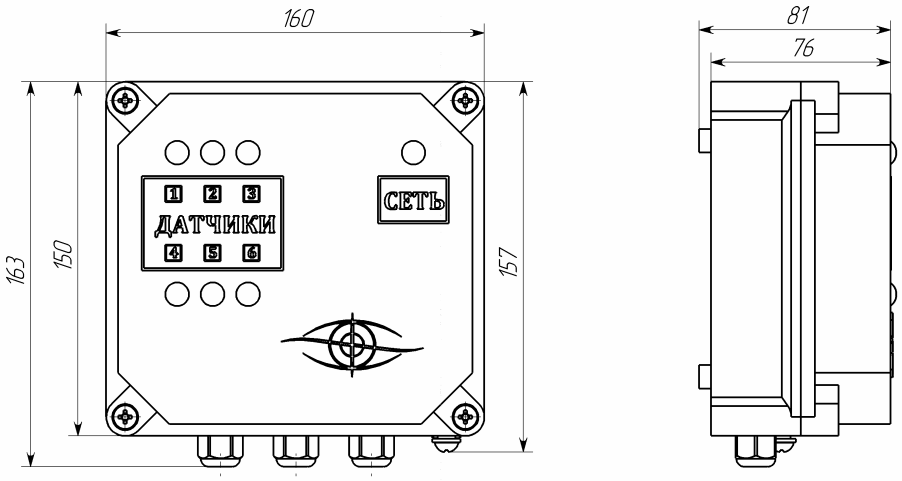

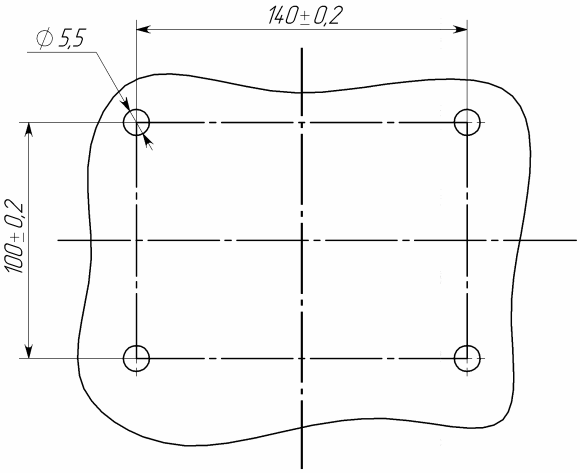

Technical specifications

Medium temperature, °C	-100... +250 (silicone, PEEK) -100 ... +450 (PTFE)
Process pressure, MPa	2,5
Materials in contact with the media	Stainless steel 12H18N10T (can be different on request)
Insulator material	Silicone (standard), PTFE, PEEK
Probe length	Rod: from 0,1 to 2,5 m (upon an order of up to 5 m) Wire rope: from 1 to 22 m
Power supply, V DC	230 V (+10%/-15%), 50 Hz ± 2%
Explosion protection marking	Without explosion protection 1 Exib IIC T6 Gb X
Switch orientation during installation	Any
Ingress protection	IP54
Output signal	Relay
Current power, no more than ... V·A	2,5
Average operation time, years	7
Ambient temperature, °C	-60 ... +60 (for the primary element) -40 ... +60 (for the secondary transmitter) (-70 ... +75 with a soft enclosure)

Order code for the conductive level switch

RIZUR-300 compact version

Ordering information:

RIZUR-302-CV	-0	-0	-500/1500	-D3	-150	-16	-I	-1	-M	-20/1,6/900	-0	-0	-SE
1	2	3	4	5	6	7	8	9	10	11	12	13	14

1. Design variant	
RIZUR-301-CV	One control point
RIZUR-302-CV	Two control points
RIZUR-303-CV	Three control points
RIZUR-304-CV	Four control points
RIZUR-30X-CV	Specify the necessary number of the control points (upon an agreement with the manufacturer)

2. Housing material	
0	Aluminum (standard)
1	Stainless steel 12X18H10T/AISI

3. Design variant and probe material	
0	Rod probe; stainless steel 12X18H10T, PEEK
1	Wire rope probe; stainless steel 12X18H10T, PEEK
2	Rod probe; stainless steel 10X17H13M2T, PEEK
X	Customized (specified in written form outside the order code)

4. Probe length	
xx	Specify the distance from the insulated surface to the control point (if there're several control points, specify L1/L2/L3/L4) *

* Maximum length of the rod probe – 6 000 mm, wire rope probe– 20 000 mm.

5. Process connection	
M0	Thread - nozzle M20*1,5
M7	Thread - nozzle M27*1,5
D3	Thread - nozzle G ¾" (standard)
D1	Thread - nozzle G1"
N3	Thread - sleeve nut G ¾"
N0	Thread - sleeve nut M30x2
X	Customized process connection: thread, flange, welded, etc. (specified in written form outside the order code)

6. Process temperature	
150	-50 ... +150 °C (standard) («spacer» height A=100 mm)
200	-100 ... +200 °C («spacer» height A=200 mm)
250	-196 ... +250 °C («spacer» height A=250 mm)

7. Process pressure	
10	Up to 1,0 MPa
16	Up to 1,6 MPa
25	Up to 2,5 MPa
40	Up to 4 MPa
X	Customized (specified in written form outside the order code)

8. Type of explosion protection	
N	Without explosion protection
I	0Ex ia IIC T6 Ga X – intrinsically safe circuit

9. Output signal	
0	Relay SPDT
1	4...20 mA discreet, two-wire connection
X	Customized output signal (specified in written form outside the order code)

10. Cable gland	
0	Without cable glands (plug M20x1,5)
M	One cable gland M20x1,5 for the non-armoured cable
MM	Two cable glands M20x1,5 for the non-armoured cable
B	One cable gland M20x1,5 for the armoured cable
BB	Two cable glands M20x1,5 for the armoured cable
X	Customized (the number and type of the cable glands is specified in written form outside the order code)

11. Medium parameters (All three parameters should be specified)	
XX/XX/XX	Operating temperature, °C/Operating pressure, MPa/Medium density, kg/m³

12. Bypass chamber	
0	Without a bypass chamber
KBU	With a bypass chamber*

* Please, attach an order code or an inquiry form for the bypass chamber (see pages 37, 38)

13. IS barrier	
0	Without IS barrier
IS	With IS barrier*

* Please, attach an order code or an inquiry form for the IS barrier

14. Soft enclosure	
0	Without soft enclosure
SE	With soft enclosure*

* Please, attach an inquiry form for soft enclosure RIZUR

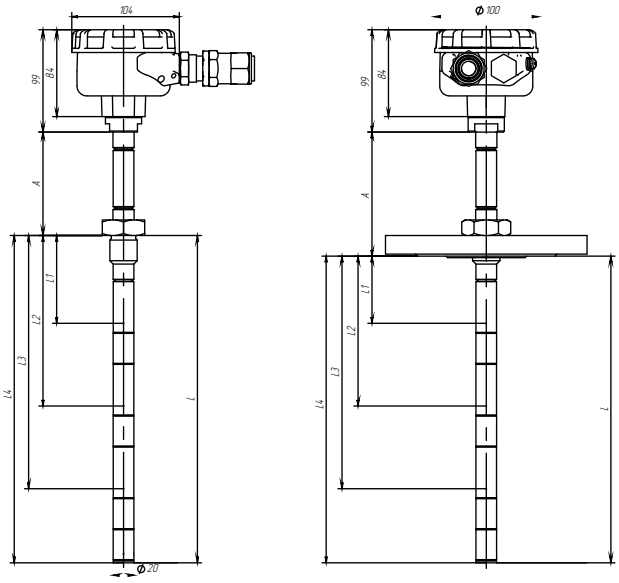

Conductive level switch RIZUR-300 split-type version

Intended use and application area

Conductive level switches RIZUR-300 are used to control from 1 to 6 levels of electrically conductive liquid in one or several tanks.

Conductive level switches can be used in automatic control systems, systems used for monitoring and management of the technological objects, and other automatic devices. Functional principle of the RIZUR-300 is based on the transformation of electric resistance of the measured media into the unified output signals (relay output).

Technical regulations
TU 26.51.52-001-12189681-2018
TR Customs Union conformity certificate
№EAEU RU C-RU.HA91.B.00029/19

Design and operating principle

Functional principle of the RIZUR-300 is based on the transformation of the electric resistance between the switch's probe and the tank's wall into a relay signal. Upon the immersion of the switch's probe into the controlled media, the resistance in the area between the probe and the wall decreases, light-emitting diode lights up and a relay of the corresponding channel is activated. In case there's no media, the resistance increases, light emitting diode goes out, and the relay is deactivated.

The level switch consists of a secondary transmitter and probes (from 1 to 6 probes, depending on the order). The secondary transmitter consists of a housing and a cover made of cast aluminum with powder-polymer coating, an electronic unit, an outside ground screw, LED-lights, terminal block for plugging-in outer conductors and cables. Signal and power cables are plugged in through the cable glands.

The probe consists of a sensor - rod or wire rope, a primary transmitter, and a cap for cable sealing of the cable plugged in to the terminal of the primary transmitter.

Tank with the controlled media should be grounded and connected to the "GND" terminal of the secondary transmitter. Upon installation of the probes to the tanks made of non-conductive materials (e.g. plastic), it's necessary to use an additional probe (e.g. metal plate) inside the tank that should be grounded and connected to the GND terminal of the secondary transmitter.

The probes should be located in such a way that eliminates their short-circuit between each other and between the additional probe or the wall of a metal tank.

Conductive level switches are not recommended for level control of liquids that generate non-conductive depositions (film) on the probes. The secondary transmitter and the probe are connected by a cable of any length with each wire resistance up to 20 Ohm.

Dimensional specifications of the probe

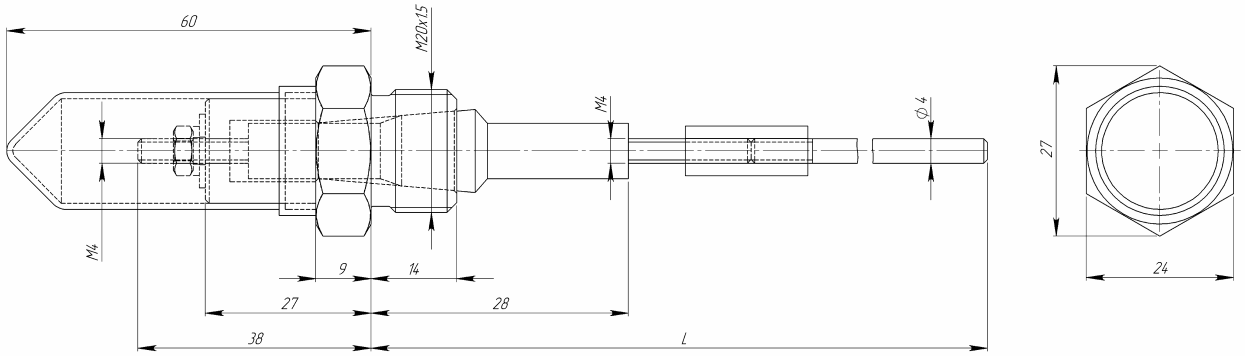

+7 (4912) 20-20-80
marketing@rizur.ru

Technical specifications

Controlled media temperature, °C	-40...+60 -60...+75 (with a soft enclosure)
Operating media temperature,°C	-196...+250
Operating media pressure, MPa	4,0
Supply voltage, V DC	24
Acceptable tolerance limits of the supply voltage, V	14...36
Consumed power, VA, no more than	5
Output relay contact load	250V, 1A, 30 VA (W)
Controlled delay of the relay's operation, S	1, 3, 10, 30 (can be different on request)
Explosion protection marking	0 Ex ia IIC T6 Ga X Without explosion protection
Ingress protection	IP67 (IP68 is possible on request)
Housing material	Aluminum alloy 12X18H10T / AISI321
Immersed part material	12X18H10T / AISI321, PEEK 10X17H13M2T, PEEK (can be different on request)
Probe length, mm **- Rod probe** **- Wire rope probe**	 50...6 000 2 500... 20 000
Number of the cable glands	1 or 2 (specified at the time of order)
Mounting position	any
Average service life, years	15

Dimensional specifications

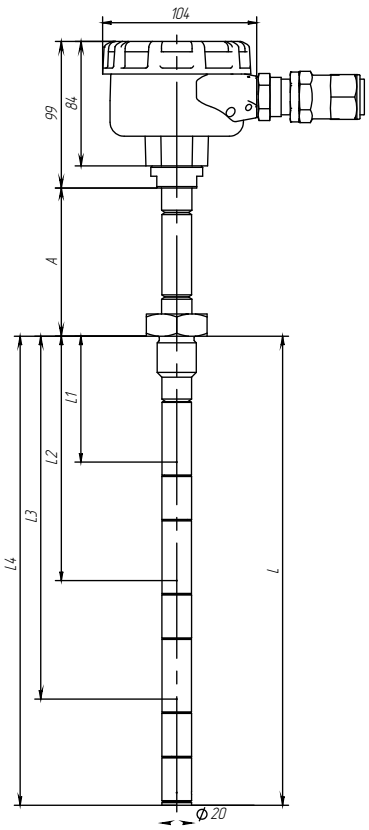

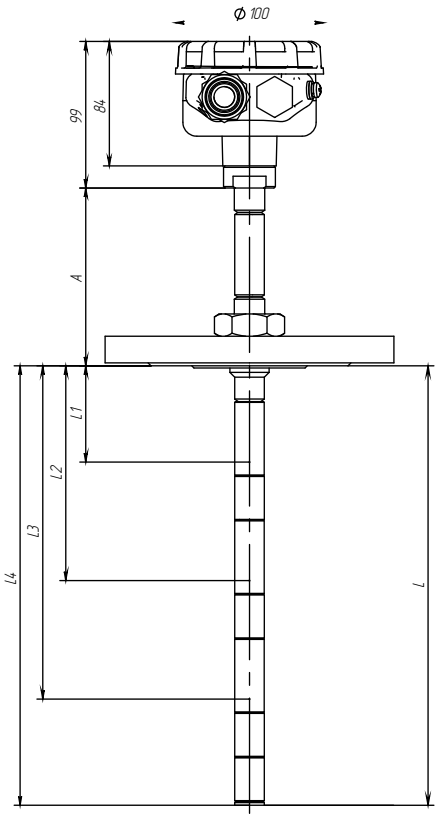

L= up to 6 000 mm (for rod sensor)
L= up to 20 000 mm (for flexible sensor)

Process temperature	Value A*
-50... +150 °C	100 mm
-100... +200 °C	200 mm
-196... +250 °C	250 mm

* The value of size A is standard.

Other sizes are possible upon special request.

+7 (4912) 20-20-80
marketing@rizur.ru

Order code for the conductive level switch RIZUR-300 split-type version

Ordering information: RIZUR-304-ST-N-P-M20-(S/1,0; S/0,25; S/0,5; S/0,5)-230

1 2 3 4 5 6

1. Design variant	
RIZUR-301-ST	One control point
RIZUR-302-ST	Two control points
RIZUR-303-ST	Three control points
RIZUR-304-ST	Four control points
RIZUR-305-ST	Five control points
RIZUR-306-ST	Six control points
2. Explosion protection types	
N	Without explosion protection
I	1Ex ib IIB T6 Gb X - intrinsically safe circuit
3. Insulator material	
P	PEEK (standard)
S	Silicone
F	PTFE
4. Probe process connection	
M20	Male thread M20x1,5 (standard)
M27	Male thread M27x1,5
MC	Customized thread connection (please, specify in written form outside the order code)
MF	Customized flange connection (please, specify in written form outside the order code)
5. Probe type and length*	
S/XX	Rod (rigid) / specify the necessary length in m
T/XX	Wire rope (flexible) / specify the necessary length in m
*The number of values should be the same as the number of control points, e.g. for 3 control points it should be specified (C/0,25; T/3,0; C/1,0)	
6. Supply voltage	
230	230 V AC
X	Customized (please specify in written form outside the order code)

+7 (4912) 20-20-80
marketing@rizur.ru